TTXL Series

Technical Reference Guide

Tower Tech

Outperform™

TTXL SERIES

FEATURES:

The TTXL Series forced-draft, counter-flow cooling tower delivers reliable thermal performance in both constant and variable heat load applications. Its modular design enables easy interconnectability to create virtually any size cooling tower and quickly accommodates future expansion of cooling tower capacity.

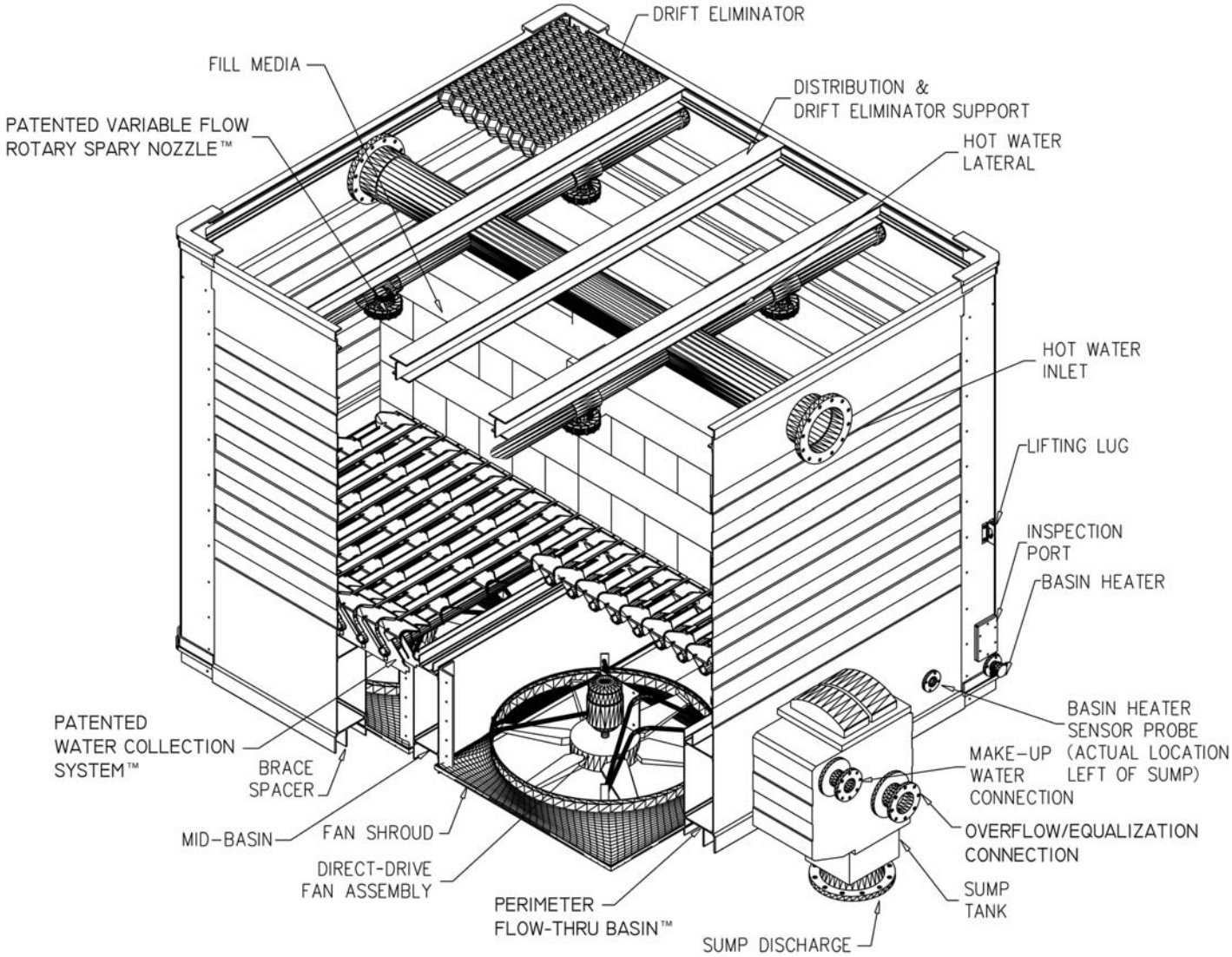

Unique Design Features Include:

- Fully Enclosed Flow-Thru Basin™
- Variable-Flow Rotary Spray Nozzle™
- Water Collection System™
- Bottom Mounted Fans

Water Collection System™

TTXL's patented Water Collection System serves as an efficient collection chamber and conduit for channeling waterflow into the tower's Flow-Thru Basin™. Its unique shape aerodynamically moves inlet air into the fill media while effectively providing a leak free barrier protecting tower mechanicals.

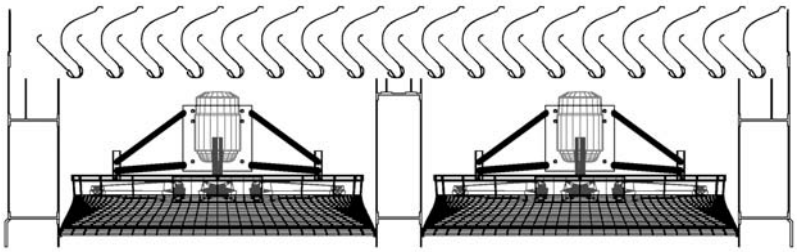

Flow-Thru Basin™

Unlike the low velocity cold-water settling basins common to conventional cooling tower designs, the TTXL tower incorporates a patented perimeter box beam which uniquely serves as both the cold water reservoir and provides the base structural component of the module. High water velocities in the basin beams continually scrub the walls and floor of the basin to eliminate the build-up of sediment and potentially bio-hazardous material – a common problem in conventional designs. Four access ports are provided for easy inspection.

Variable-Flow Rotary Spray Nozzle™

The patented Variable-Flow Rotary Spray Nozzle™ delivers even fill coverage across a broad range of system flows (~100-300 gpm/nozzle) at low pressures (0.5 – 1.5 psi). The nozzle requires less pressure to operate than a conventional nozzle, is virtually maintenance free, and dramatically improves tower performance.

Use of a lateral spray pattern allows the nozzle to be positioned just one inch off the fill material, saving several feet of pump head. The nozzle's turbine-driven rotor spins on a water bearing that keeps the nozzle parts from wearing, as well as provides the needed agitation to ensure virtually clog-free service. The rotary turbine produces a larger water droplet than conventional nozzles and thereby reduces drift loading on the drift eliminators for the lowest drift loss coefficient of any cooling tower.

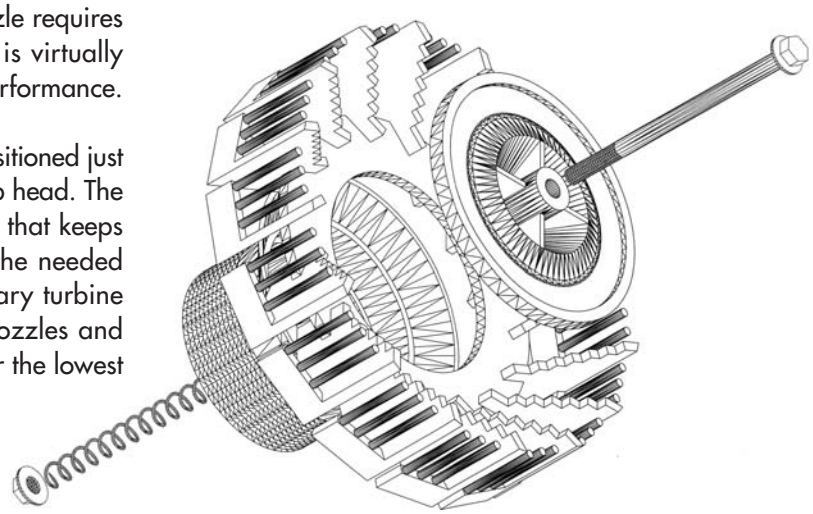

NOZZLE SPRAY DISTANCE
VERSUS FLOW

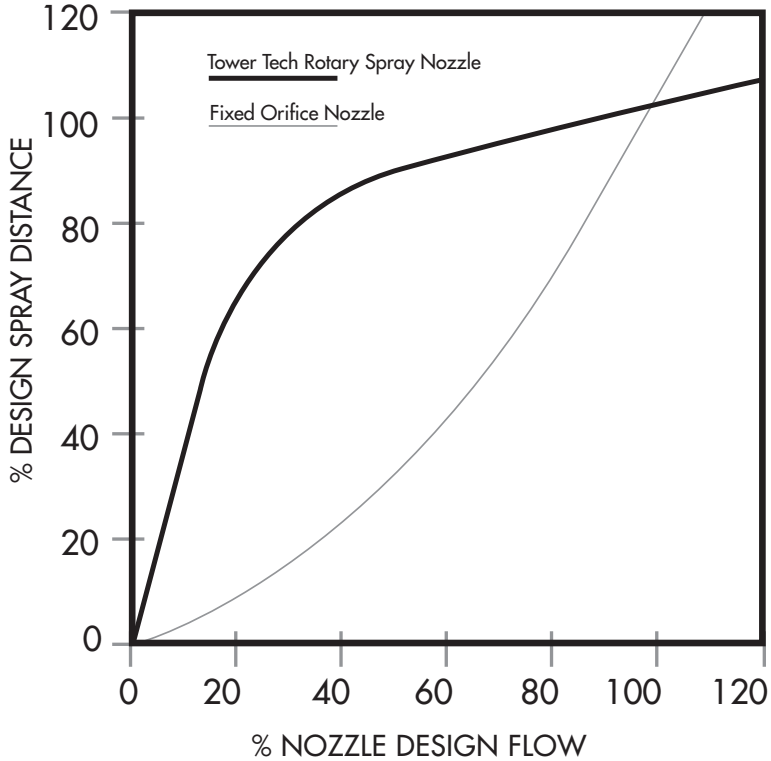

The chart demonstrates the constancy in spray pattern coverage at varying flow rates using the Rotary Spray Nozzle™. The nozzle orifice is shaped to provide an even square spray pattern, thereby uniformly wetting the entire tower's fill. This improves tower performance and reduces the likelihood of scaling due to the occurrence of dry regions within the fill. Variable-flow capability stems from the unique spring-actuated orifice which allows the nozzle to automatically adjust its pattern to changes in the flow rate, significantly reducing the down turn in performance observed with conventional nozzle designs. While conventional towers require a reduction in cell usage when system flow decreases, TTXL technology permits this reduced flow to be evenly distributed over all available fill area. This results in maximizing cooling capacity and energy efficiency under partial load duties.

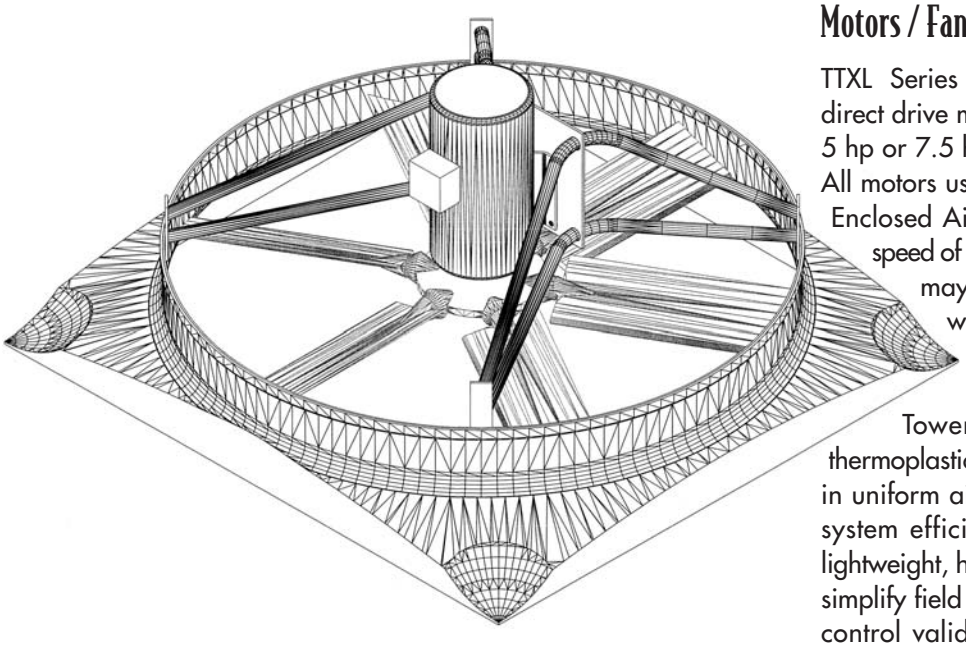

Motors / Fans / Shrouds

TTXL Series standard model towers use high efficiency direct drive motors. Motor sizes available include 3, hp, 5 hp or 7.5 hp, depending on the tower model selected. All motors use a 215T frame size and are TEAO (Totally Enclosed Air Over). All motors operate at a nominal speed of 860 RPM. Motors from alternate manufacturers may be specified as special order items. Check with your Tower Tech Representative for more information.

Tower Tech fans use high-efficiency, molded thermoplastic blades with a unique airfoil design resulting in uniform airflow, minimal turbulence, and maximized system efficiency. Adjustable-pitch blades along with lightweight, high-strength cast aluminum-silicon alloy hubs simplify field adjustments. Blade tip tolerances are quality control validated in order to ensure maximum system efficiencies. Tower Tech's stainless steel tubular motor mount provides minimum air turbulence, reduced fan noise, and long life for support of mechanical equipment.

The TTXL Series precision molded fan shroud is manufactured using hand-laid fiberglass techniques. It is engineered to provide a smooth air entry (optimized r/d) and approach velocity. The heavy-duty fiberglass shroud is lightweight and will resist corrosion indefinitely.

Fill & Drift Eliminators

TTXL Series cooling towers are equipped with five feet (5′-0″) of rigid cross-corrugated, high-efficiency PVC film fill media (10 mil thickness). This fill media is resistant to biological degradation and to most chemicals (inorganic alkalis or acids, as well as organics) common to cooling tower systems. Its high surface area to volume ratio provides optimum heat exchange efficiency. The TTXL tower shell may be equipped with configurations to meet any water quality demand – alternative thermal capacity ratings are available from your Tower Tech design engineer. In addition to PVC, TTXL Series towers may be optionally equipped with HPVC fill suitable for use in "hot water" applications within a working range of 130°F to 140°F. Alternative 15 mil thickness material is also available as a specified option.

TTXL Series cooling towers are equipped with low-pressure sinusoidal-wave shaped PVC drift eliminators (15 mil finished thickness). These high-efficiency cells (drift loss guaranteed not to exceed 0.0004%) force the exiting airstream to make three distinct directional changes causing exiting moisture droplets to impinge and coalesce on its high surface areas. The PVC material used in the construction is virtually impervious to rot, decay, or biological attack. An ultraviolet inhibitor manufactured into the product extends the life expectancy.

Materials of Construction

The Tower Tech TTXL Series cooling tower structure is factory-assembled and constructed entirely of fiberglass and stainless steel hardware, which together provide a rigid shell and framework for the tower that will resist deterioration and corrosion indefinitely. There are no galvanized or wood components which may leak potentially hazardous chemicals into the environment. Walls are joined together by tongue and groove joints and are sealed by a polyurethane sealant to prevent leaks. Stainless steel fasteners employing coated threads (in wetted areas) are used to bolt the walls together and ensure leak-free operation under pressurized operating conditions.

Component	Material	Component	Material
Corner Enclosures	FRP (pultruded)	Sub-structure Legs	FRP (pultruded)
Shell/Casing	FRP (pultruded)	Windwall Partitions	ABS (extruded)
Fill Media	10 mil PVC	Modular Base Support	Nylon (injection molded)
Drift Eliminators	15 mil PVC	Fan Shroud	Hand-laid Fiberglass
Rotary Spray Nozzle™ (injection molded)	HDPE & Stainless Steel	Sump Box	PP (rotational mold)
Lateral Distribution	ABS	Inspection Ports	Nylon (injection molded)
Water Collection System™	ABS (injection molded & extruded)	Hardware	304 Stainless Steel
Header Inlet	PVC (injection molded)	Fan Support	304 Stainless Steel

Where FRP = Fiber-glass Reinforced, plastic Pultrusion; PVC = Poly Vinyl Chloride; HDPE = High Density Poly-Ethylene; ABS=Acrylonitrile, 1,3 Butadiene, and Styrene Copolymer, Flame Retardant; PP = Poly-Propylene.

Weights and Dimensions

TTXL Model	Weights (lb)		Dimensions (per illustration) [a]							
	Shipping	Operating	A	B	C	D	E	F	G	H
i219xx	5,245	9,609	7′-00″	3′-06″	10′-1″	1′-04″	4′-00″	6′-00″	17′-00″	13′-06″
i319xx	7,040	13,128	7′-00″	3′-06″	10′-1″	1′-04″	4′-00″	6′-00″	17′-00″	19′-03″
i419xx	8,835	16,641	7′-00″	3′-06″	10′-1″	1′-04″	4′-00″	6′-00″	17′-00″	25′-00″
0419xx	7,912	13,758	12′-00″	6′-00″	9′-11″	1′-04″	6′-00″	6′-00″	17′-00″	13′-06″
i519xx	10,630	20,163	7′-00″	3′-06″	9′-11″	1′-04″	4′-00″	6′-00″	17′-00″	30′-09″
0619xx	11,662	19,727	12′-00″	6′-00″	9′-11″	1′-04″	6′-00″	6′-00″	17′-00″	19′-03″
0819xx	15,412	25,695	12′-00″	6′-00″	9′-11″	1′-04″	6′-00″	6′-00″	17′-00″	25′-00″
1019xx	19,162	31,655	12′-00″	6′-00″	9′-11″	1′-04″	6′-00″	6′-00″	17′-00″	30′-09″
1219xx	22,912	37,623	12′-00″	6′-00″	9′-11″	1′-04″	[b]	6′-00″	17′-00″	36′-06″

[a] *Dimensions are approximate and should not be used for construction purposes. Dimension F may be 1′-00″, 4′-00″, 6′-00″, 8′-00″, 10′-00″ or 12′-00″ depending on project requirements. 12′-00″ may be specified with prior approval of Tower Tech engineering manager only. Dimension F on drawing below is 6′-00″.*

[b] *TTXL-12xx requires two external sump containers. Refer to CAD drawings on Tower Tech website.*

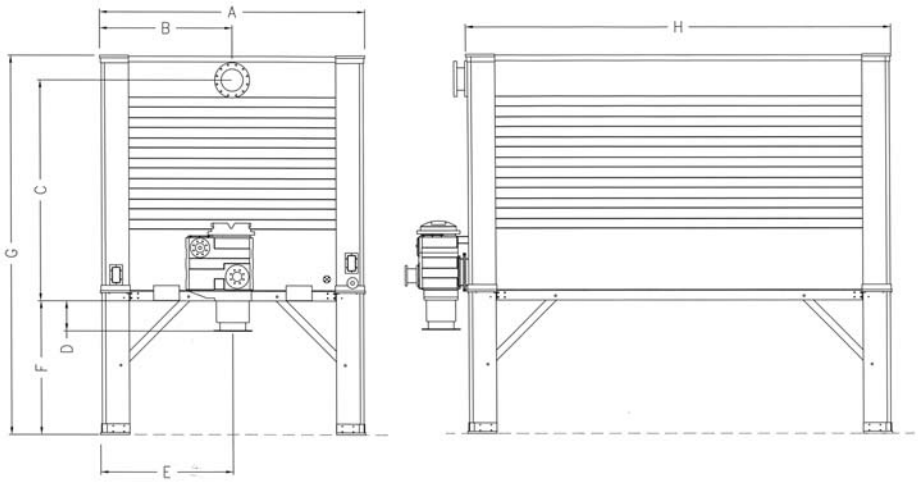

Engineering Data

TTXL Model	Fan Motor (3 phase, 60 Hz)								Connections			
	No. Fans	Volts	HP/Fan	HP/ Module	FLA / Module	SFA/MMC / Module[a]	Efficiency[b]	RPM	Inlet Dia.	Outlet Dia.	Make-up Dia.	Overflow Dia.
i21930	2	200 230 460 575	3	6	24.2 22.4 11.2 9.0	26.6 24.3 12.3 10.4	84.0	865	6	8	1″ FNPT	4
i21950	2	200 230 460 575	5	10	40.0 33.2 16.6 13.4	44.0 36.5 18.4 15.4	85.5	855	6	8	1″ FNPT	4
i21975	2	200 230 460 575	7.5	15	60.0 49.2 24.6 20.6	66.0 55.3 27.5 22.8	81.5	850	6	8	1″ FNPT	4
i31930	3	200 230 460 575	3	9	36.3 33.6 16.8 13.5	39.9 36.5 18.3 15.5	84.0	865	8	8	1″ FNPT	4
i31950	3	200 230 460 575	5	15	60.0 49.8 24.9 20.1	66.0 54.8 27.6 23.1	85.5	855	8	8	1″ FNPT	4
i31975	3	200 230 460 575	7.5	22.5	90.0 73.8 36.9 30.9	99.0 82.9 41.3 34.2	81.5	850	8	8	1″ FNPT	4
i41930	4	200 230 460 575	3	12	48.4 44.8 22.4 18.0	53.2 48.6 24.6 20.7	84.0	865	8	10	2″ FNPT	6
i41950	4	200 230 460 575	5	20	80.0 66.4 33.2 26.8	88.0 73.0 36.7 30.8	85.5	855	8	10	2″ FNPT	6
i41975	4	200 230 460 575	7.5	30	120.0 98.4 49.2 41.2	132.0 110.5 55.1 45.6	81.5	850	8	10	2″ FNPT	6
041930	4	200 230 460 575	3	12	48.4 44.8 22.4 18.0	53.2 48.6 24.6 20.7	84.0	865	8	10	2″ FNPT	6
041950	4	200 230 460 575	5	20	80.0 66.4 33.2 26.8	88.0 73.0 36.7 30.8	85.5	855	8	10	2″ FNPT	6
041975	4	200 230 460 575	7.5	30	120.0 98.4 49.2 41.2	132.0 110.5 55.1 45.6	81.5	850	8	10	2″ FNPT	6
i51930	5	200 230 460 575	3	15	60.5 56.0 28.0 22.5	69.5 60.8 31.92 5.9	84.0	865	8	12	2″ FNPT	6
i51950	5	200 230 460 575	5	25	92.5 83.0 41.5 33.5	106.4 91.3 45.4 38.5	85.5	855	8	12	2″ FNPT	6
i51975	5	200 230 460 575	7.5	37.5	132.5 123.0 61.5 51.5	152.4 138.1 68.8 57.0	81.5	850	8	12	2″ FNPT	6

Engineering Data

TTXL Model	Fan Motor (3 phase, 60 Hz)								Connections			
	No. Fans	Volts	HP/Fan	HP/ Module	FLA / Module	SFA/MMC / Module[a]	Efficiency[b]	RPM	Inlet Dia.	Outlet Dia.	Make-up Dia.	Overflow Dia.
061930	6	200	3	18	72.6	79.9	84.0	865	10	12	2″ FNPT	6
		230			67.2	73.0						
		460			33.6	37.0						
		575			27.0	31.0						
061950	6	200	5	30	120.0	132.0	85.5	855	10	12	2″ FNPT	6
		230			99.6	109.5						
		460			49.8	55.1						
		575			40.2	46.2						
061975	6	200	7.5	45	180.0	198.0	81.5	850	10	12	2″ FNPT	6
		230			147.6	165.8						
		460			73.8	82.1						
		575			61.8	68.4						
081930	8	200	3	24	96.8	106.5	84.0	865	12	14	2″ FNPT	6
		230			89.6	97.3						
		460			44.8	49.3						
		575			36.0	41.4						
081950	8	200	5	40	160.0	176.0	85.5	855	12	14	2″ FNPT	6
		230			132.8	146.0						
		460			66.4	73.5						
		575			53.6	61.6						
081975	8	200	7.5	60	240.0	264.0	81.5	850	12	14	2″ FNPT	6
		230			196.8	221.0						
		460			98.4	110.1						
		575			82.4	91.2						
101930	10	200	3	30	121.0	133.1	84.0	865	12	14	2″ FNPT	6
		230			112.0	121.6						
		460			56.0	61.4						
		575			45.0	51.8						
101950	10	200	5	50	200.0	220.0	85.5	855	12	14	2″ FNPT	6
		230			166.0	182.5						
		460			83.0	91.8						
		575			67.0	77.1						
101975	10	200	7.5	75	265.0	304.8	81.5	850	12	14	2″ FNPT	6
		230			246.0	276.3						
		460			123.0	137.6						
		575			103.0	114.0						
121930	12	200	3	36	145.2	167.0	84.0	865	12	12[c]	2″ FNPT	6
		230			134.4	145.9						
		460			67.2	74.1						
		575			54.0	62.1						
121950	12	200	5	60	222.0	255.3	85.5	855	12	12[c]	2″ FNPT	6
		230			199.2	219.0						
		460			99.6	108.9						
		575			80.4	92.5						
121975	12	200	7.5	90	318.0	365.7	81.5	850	12	12[c]	2″ FNPT	6
		230			295.2	331.5						
		460			147.6	165.2						
		575			123.6	136.8						

[a] *Baldor motor data. SFA/MMC refers to Service Factor Amps/Maximum Motor Current. VFD must be sized for FLA at a minimum. If use of motor service factor is desired, VFD should be sized for SFA/MMC.*

[b] *Rating is NEMA nominal efficiency. Standard motors, TEAO severe duty, direct drive with L_{10} 100,000 hr. sealed bearings, 1.15 service factor, Inverter Ready with quantum shield wiring, class "F" insulation (minimum).*

[c] *TTXL-12xxxx requires two external sump containers. Refer to CAD drawings on Tower Tech website.*

Thermal Performance Data *Thermal capacities assume 6′ air inlet.*

Model TTXL	Fan Power		GPM Cooling Capacity at Indicated Operating Conditions										
	No. Fans	HP Total	HWT °F	85	95	87	90	95	87	90	95	92	100
			CWT °F	75	80	77	80	80	77	80	80	82	85
			WBT °F	68	68	70	70	70	72	72	72	75	75
i21930	2	6		347	423	365	486	383	302	427	340	416	437
i21950	2	10		398	486	420	559	440	347	490	390	478	502
i21975	2	15		444	542	468	600	490	386	547	434	533	559
i31930	3	9		498	608	524	699	550	434	613	488	598	628
i31950	3	15		572	698	602	803	631	498	704	559	686	720
i31975	3	22.5		638	778	672	896	704	555	785	623	765	803
i41930	4	12		653	797	687	916	720	569	803	640	783	822
i41950	4	20		750	914	788	1052	826	652	922	732	899	944
i41975	4	30		835	1019	879	1173	921	726	1027	816	1002	1051
041930	4	12		640	781	674	898	706	558	787	627	768	806
041950	4	20		735	896	773	1031	810	639	904	718	881	925
041975	4	30		819	999	862	1150	903	712	1007	800	982	1030
i51930	5	15		808	985	850	1133	891	703	993	790	978	1027
i51950	5	25		926	1129	975	1300	1021	806	1139	904	1122	1179
i51975	5	37.5		1031	1258	1086	1449	1137	897	1269	1007	1253	1315
061930	6	18		918	1120	967	1288	1013	800	1129	899	1101	1156
061950	6	30		1054	1285	1109	1480	1162	917	1296	1030	1263	1326
061975	6	45		1174	1433	1236	1650	1295	1021	1445	1147	1409	1477
081930	8	24		1205	1470	1269	1691	1329	1049	1481	1179	1445	1517
081950	8	40		1382	1686	1456	1941	1525	1203	1700	1351	1658	1740
081975	8	60		1541	1880	1622	2165	1699	1340	1896	1505	1849	1939
101930	10	30		1492	1820	1571	2094	1646	1300	1835	1460	1790	1879
101950	10	50		1712	2089	1803	2404	1888	1490	2106	1674	2054	2154
101975	10	75		1908	2328	2009	2681	2104	1659	2348	1864	2289	2400
121930	12	36		1766	2154	1859	2479	1948	1538	2172	1726	2134	2240
121950	12	60		2025	2470	2132	2845	2232	1761	2491	1978	2448	2573
121975	12	90		2257	2752	2375	3171	2487	1961	2776	2202	2731	2869

Thermal Performance Data *Thermal capacities assume 6′ air inlet.*

Model TTXL	Fan Power		GPM Cooling Capacity at Indicated Operating Conditions										
	No. Fans	HP Total	HWT °F	93	100	95	100	93	105	97	95	100	105
			CWT °F	83	85	85	85	83	85	87	85	85	90
			WBT °F	76	76	78	78	78	78	80	80	80	80
i21930	2	6		427	413	450	363	355	318	475	375	307	500
i21950	2	10		491	474	518	416	407	364	546	429	351	574
i21975	2	15		547	529	577	463	454	405	600	479	391	600
i31930	3	9		613	593	647	521	509	456	682	538	440	718
i31950	3	15		705	681	743	597	584	522	783	617	504	824
i31975	3	22.5		786	759	828	665	651	581	874	687	561	900
i41930	4	12		804	777	846	682	667	598	894	704	577	940
i41950	4	20		922	891	972	781	765	683	1026	808	660	1078
i41975	4	30		1028	993	1083	870	853	761	1142	900	734	1202
041930	4	12		788	762	831	669	654	586	876	690	566	922
041950	4	20		904	874	953	766	750	670	1006	792	647	1057
041975	4	30		1008	974	1063	853	836	746	1120	882	720	1178
i51930	5	15		1002	972	1047	842	824	737	1106	870	712	1161
i51950	5	25		1152	1117	1201	964	944	843	1267	997	814	1331
i51975	5	37.5		1285	1245	1338	1073	1051	1073	1410	1109	905	1481
061930	6	18		1131	1093	1192	959	938	839	1257	991	811	1323
061950	6	30		1297	1254	1367	1099	1076	961	1443	1135	928	1516
061975	6	45		1446	1396	1524	1223	1199	1069	1608	1265	1033	1689
081930	8	24		1484	1434	1564	1258	1231	1101	1649	1300	1064	1735
081950	8	40		1702	1645	1794	1441	1412	1261	1892	1490	1218	1990
081975	8	60		1897	1832	2000	1605	1573	1402	2109	1660	1355	2216
101930	10	30		1837	1776	1937	1558	1525	1364	2043	1610	1317	2148
101950	10	50		2108	2037	2222	1785	1748	1561	2344	1845	1508	2463
101975	10	75		2350	2269	2476	1987	1947	1736	2612	2055	1677	2744
121930	12	36		2186	2122	2291	1841	1802	1610	2415	1902	1556	2539
121950	12	60		2513	2436	2627	2108	2066	1842	2770	2180	1780	2910
121975	12	90		2803	2715	2927	2346	2299	2048	3086	2427	1979	3240

The thermal performance of the TTXL Series cooling towers is certified by the Cooling Technology Institute in accordance with its standard STD-201(04) and has been assigned CTI validation number 08-17-06. This certification is your assurance that the proposed capacities accurately reflect actual cooling tower performance. CTI certification under STD-201(04) is limited to thermal operating conditions with entering wet bulbs between 55°F and 90°F, a maximum process fluid temperature of 125°F, a cooling range of 4°F or greater, and a cooling approach of 5°F or greater.

Sub-Structure/Multiple Modules % Capability Correction (3 HP Models)

Inlet Ht (ft)	% Capability Correction (3 HP Models) Number of Modules									
	1	2	3	4	5	6	7	8	9	10
i21930										
4	0.998	0.993	0.988	0.984	0.981	0.978	0.976	0.973	0.972	0.970
6	1.000	0.998	0.996	0.994	0.993	0.991	0.990	0.990	0.989	0.988
8	1.000	1.000	0.998	0.997	0.997	0.996	0.995	0.995	0.994	0.994
10	1.001	1.001	0.999	0.999	0.998	0.998	0.998	0.997	0.997	0.997
12	1.002	1.001	1.001	1.000	0.999	0.999	0.999	0.999	0.998	0.998
i31930										
4	0.998	0.991	0.985	0.978	0.973	0.967	0.972	0.959	0.956	0.953
6	1.000	0.997	0.994	0.992	0.989	0.986	0.985	0.983	0.981	0.980
8	1.000	0.999	0.997	0.995	0.995	0.993	0.992	0.991	0.990	0.990
10	1.001	1.000	0.999	0.998	0.997	0.996	0.995	0.995	0.994	0.994
12	1.001	1.001	0.999	0.999	0.998	0.998	0.997	0.997	0.997	0.996
i41930										
4	0.997	0.989	0.980	0.971	0.963	0.955	0.949	0.943	0.938	0.933
6	1.000	0.996	0.992	0.988	0.985	0.981	0.978	0.975	0.973	0.971
8	1.001	0.998	0.992	0.994	0.992	0.990	0.988	0.987	0.986	0.984
10	1.001	0.999	0.996	0.997	0.996	0.994	0.993	0.992	0.991	0.991
12	1.001	1.001	0.998	0.998	0.997	0.997	0.996	0.995	0.994	0.994
041930										
4	0.997	0.991	0.987	0.985	0.983	0.982	0.981	0.980	0.979	0.978
6	1.000	0.998	0.996	0.995	0.994	0.993	0.993	0.992	0.992	0.992
8	1.001	1.000	0.999	0.998	0.998	0.998	0.997	0.997	0.997	0.997
10	1.002	1.001	1.001	1.000	0.999	0.999	0.999	0.999	0.999	0.999
12	1.002	1.002	1.001	1.001	1.001	1.001	1.001	1.001	1.000	1.000
i51930										
4	0.998	0.989	0.978	0.968	0.958	0.948	0.947	0.932	0.926	0.919
6	1.000	0.996	0.992	0.987	0.982	0.978	0.974	0.970	0.966	0.964
8	1.001	1.999	0.996	0.998	0.991	0.988	0.986	0.984	0.982	0.980
10	1.002	1.000	0.998	0.996	0.995	0.993	0.992	0.991	0.989	0.988
12	1.002	1.000	1.000	0.998	0.997	0.996	0.995	0.994	0.993	0.992
061930										
4	0.996	0.987	0.980	0.975	0.971	0.968	0.966	0.964	0.962	0.961
6	1.000	0.996	0.993	0.991	0.989	0.988	0.987	0.986	0.985	0.984
8	1.001	0.999	0.997	0.996	0.996	0.995	0.994	0.994	0.993	0.993
10	1.002	1.001	1.000	0.999	0.998	0.998	0.998	0.997	0.997	0.997
12	1.003	1.002	1.001	1.001	1.000	0.999	0.999	0.999	0.999	0.999
081930										
4	0.995	0.983	0.974	0.966	0.960	0.955	0.951	0.947	0.944	0.942
6	1.000	0.994	0.990	0.986	0.984	0.981	0.979	0.978	0.976	0.975
8	1.002	0.998	0.996	0.994	0.992	0.991	0.990	0.989	0.988	0.987
10	1.002	1.001	0.999	0.998	0.996	0.996	0.995	0.994	0.994	0.994
12	1.003	1.002	1.001	0.999	0.999	0.998	0.998	0.997	0.997	0.996
101930										
4	0.995	0.981	0.968	0.958	0.949	0.942	0.936	0.931	0.927	0.923
6	1.000	0.994	0.988	0.983	0.979	0.975	0.973	0.970	0.968	0.966
8	1.002	0.998	0.995	0.992	0.990	0.988	0.986	0.985	0.983	0.982
10	1.003	1.001	0.998	0.996	0.995	0.993	0.992	0.992	0.990	0.990
12	1.004	1.002	1.000	0.999	0.998	0.997	0.996	0.995	0.995	0.994
121930										
4	0.994	0.978	0.962	0.949	0.938	0.929	0.821	0.915	0.909	0.904
6	1.000	0.992	0.985	0.979	0.973	0.969	0.965	0.961	0.959	0.956
8	1.002	0.998	0.994	0.990	0.987	0.984	0.982	0.980	0.979	0.976
10	1.003	1.000	0.997	0.995	0.993	0.991	0.990	0.988	0.987	0.986
12	1.003	1.001	0.999	0.998	0.996	0.995	0.994	0.993	0.992	0.992

Sub-Structure/Multiple Modules % Capability Correction (5 HP Models)

Inlet Ht (ft)	% Capability Correction (5 HP Models) Number of Modules									
	1	2	3	4	5	6	7	8	9	10
i21950										
4	0.998	0.993	0.989	0.985	0.981	0.979	0.976	0.974	0.973	0.971
6	1.000	0.998	0.996	0.994	0.993	0.992	0.991	0.990	0.989	0.989
8	1.001	0.999	0.998	0.998	0.997	0.996	0.995	0.995	0.995	0.994
10	1.001	1.000	1.000	0.999	0.999	0.998	0.998	0.997	0.997	0.997
12	1.001	1.001	1.000	1.000	1.000	0.999	0.999	0.999	0.999	0.999
i31950										
4	0.998	0.992	0.985	0.979	0.973	0.969	0.965	0.961	0.958	0.954
6	1.000	0.997	0.994	0.992	0.989	0.987	0.985	0.984	0.982	0.981
8	1.000	0.999	0.997	0.996	0.995	0.993	0.992	0.992	0.991	0.990
10	1.001	1.000	0.999	0.998	0.997	0.996	0.996	0.995	0.995	0.994
12	1.001	1.001	1.000	1.000	0.999	0.998	0.998	0.997	0.997	0.997
i41950										
4	0.998	0.990	0.981	0.972	0.965	0.957	0.951	0.945	0.940	0.936
6	1.000	0.997	0.993	0.989	0.986	0.982	0.979	0.957	0.974	0.972
8	1.001	0.999	0.997	0.995	0.993	0.991	0.989	0.988	0.987	0.985
10	1.001	1.000	0.999	0.997	0.996	0.995	0.994	0.993	0.992	0.991
12	1.001	1.001	1.000	0.999	0.998	0.997	0.996	0.996	0.995	0.995
041950										
4	0.997	0.991	0.988	0.985	0.983	0.982	0.981	0.980	0.979	0.979
6	1.000	0.998	0.996	0.995	0.994	0.993	0.993	0.993	0.992	0.992
8	1.001	1.000	0.999	0.998	0.998	0.998	0.997	0.997	0.997	0.997
10	1.002	1.001	1.000	1.000	1.000	1.000	1.000	1.000	0.999	0.999
12	1.002	1.001	1.001	1.001	1.001	1.000	1.000	1.000	1.000	1.000
i51950										
4	0.998	0.989	0.979	0.969	0.959	0.950	0.942	0.934	0.928	0.922
6	1.000	0.996	0.991	0.987	0.983	0.978	0.974	0.971	0.968	0.965
8	1.001	0.999	0.996	0.994	0.991	0.989	0.987	0.984	0.983	0.981
10	1.002	1.000	0.998	0.996	0.995	0.993	0.992	0.991	0.989	0.988
12	1.002	1.000	1.000	0.998	0.997	0.996	0.995	0.994	0.993	0.992
061950										
4	0.996	0.988	0.981	0.976	0.972	0.969	0.967	0.965	0.963	0.963
6	1.000	0.996	0.994	0.991	0.989	0.988	0.987	0.986	0.985	0.985
8	1.001	1.000	0.998	0.996	0.995	0.994	0.994	0.994	0.993	0.993
10	1.003	1.001	1.000	0.999	0.998	0.998	0.997	0.997	0.997	0.997
12	1.003	1.002	1.001	1.001	1.000	1.000	0.999	0.999	0.999	0.999
081950										
4	0.996	0.984	0.975	0.967	0.961	0.956	0.952	0.949	0.946	0.944
6	1.000	0.995	0.990	0.987	0.984	0.982	0.980	0.979	0.977	0.976
8	1.002	0.999	0.996	0.994	0.993	0.991	0.990	0.989	0.989	0.988
10	1.003	1.001	0.999	0.997	0.996	0.996	0.995	0.994	0.994	0.994
12	1.003	1.002	1.001	0.999	0.999	0.998	0.998	0.997	0.997	0.997
101950										
4	0.996	0.981	0.969	0.959	0.950	0.944	0.938	0.933	0.929	0.926
6	1.000	0.994	0.989	0.984	0.980	0.976	0.973	0.971	0.969	0.967
8	1.002	0.998	0.996	0.992	0.990	0.989	0.987	0.985	0.984	0.983
10	1.003	1.001	0.998	0.996	0.995	0.993	0.992	0.992	0.991	0.990
12	1.003	1.002	1.000	0.998	0.997	0.997	0.996	0.995	0.995	0.994
121950										
4	0.994	0.978	0.963	0.950	0.938	0.930	0.922	0.915	0.910	0.905
6	1.000	0.992	0.985	0.979	0.974	0.969	0.965	0.962	0.959	0.956
8	1.002	0.997	0.994	0.990	0.987	0.984	0.981	0.979	0.978	0.976
10	1.003	1.000	0.997	0.995	0.993	0.991	0.990	0.988	0.987	0.986
12	1.003	1.001	0.999	0.998	0.996	0.995	0.994	0.993	0.992	0.992

Sub-Structure/Multiple Modules % Capability Correction (7.5 HP Models)

Inlet Ht (ft)	% Capability Correction (7.5 HP Models) Number of Modules									
	1	2	3	4	5	6	7	8	9	10
i21975										
4	0.998	0.994	0.989	0.985	0.982	0.979	0.977	0.974	0.973	0.972
6	1.000	0.998	0.996	0.994	0.993	0.992	0.991	0.990	0.989	0.989
8	1.000	1.000	0.998	0.998	0.997	0.996	0.996	0.995	0.995	0.994
10	1.001	1.000	0.999	0.999	0.998	0.998	0.998	0.998	0.997	0.997
12	1.001	1.001	1.000	1.000	0.999	0.999	0.999	0.999	0.998	0.998
i31975										
4	0.998	0.992	0.985	0.979	0.974	0.969	0.965	0.961	0.958	0.956
6	1.000	0.998	0.995	0.992	0.990	0.988	0.985	0.984	0.983	0.981
8	1.000	0.999	0.998	0.996	0.995	0.994	0.993	0.961	0.991	0.990
10	1.001	1.000	0.999	0.998	0.997	0.997	0.996	0.995	0.995	0.995
12	1.001	1.000	1.000	0.999	0.999	0.998	0.998	0.997	0.997	0.997
i41975										
4	0.997	0.990	0.981	0.972	0.965	0.958	0.951	0.946	0.941	0.936
6	1.000	0.997	0.992	0.989	0.985	0.982	0.979	0.977	0.974	0.972
8	1.000	0.999	0.997	0.994	0.992	0.991	0.989	0.988	0.986	0.985
10	1.001	1.000	0.998	0.997	0.996	0.995	0.994	0.993	0.992	0.991
12	1.001	1.000	0.999	0.998	0.997	0.997	0.996	0.995	0.995	0.994
041975										
4	0.997	0.991	0.988	0.986	0.984	0.983	0.981	0.980	0.980	0.979
6	1.000	0.998	0.996	0.995	0.994	0.994	0.993	0.993	0.993	0.992
8	1.001	1.000	0.999	0.998	0.998	0.997	0.997	0.997	0.997	0.997
10	1.002	1.001	1.000	1.000	1.000	1.000	0.857	0.999	0.999	0.999
12	1.002	1.002	1.001	1.001	1.001	1.001	1.001	1.000	1.000	1.000
i51975										
4	0.998	0.989	0.979	0.969	0.960	0.951	0.942	0.935	0.929	0.923
6	1.000	0.996	0.992	0.987	0.983	0.979	0.975	0.972	0.968	0.965
8	1.001	0.999	0.996	0.993	0.991	0.989	0.987	0.985	0.983	0.981
10	1.002	1.000	0.998	0.996	0.995	0.993	0.992	0.991	0.989	0.988
12	1.002	1.000	1.000	0.998	0.997	0.996	0.995	0.994	0.993	0.992
061975										
4	0.996	0.988	0.981	0.977	0.973	0.971	0.968	0.966	0.964	0.964
6	1.000	0.997	0.994	0.991	0.990	0.988	0.988	0.987	0.986	0.985
8	1.002	1.000	0.998	0.997	0.996	0.995	0.995	0.994	0.994	0.993
10	1.002	1.001	1.000	0.999	0.998	0.998	0.997	0.997	0.997	0.997
12	1.003	1.002	1.001	1.000	1.000	1.000	0.999	0.999	0.999	0.999
081975										
4	0.995	0.984	0.975	0.968	0.962	0.957	0.953	0.950	0.947	0.945
6	1.000	0.995	0.991	0.987	0.984	0.982	0.980	0.979	0.977	0.976
8	1.002	0.998	0.996	0.995	0.993	0.991	0.991	0.989	0.989	0.988
10	1.002	1.000	0.999	0.998	0.997	0.996	0.995	0.994	0.994	0.994
12	1.003	1.001	1.000	1.000	0.999	0.998	0.998	0.998	0.997	0.997
101975										
4	0.995	0.982	0.970	0.960	0.952	0.944	0.939	0.934	0.930	0.927
6	1.000	0.994	0.988	0.983	0.979	0.976	0.973	0.971	0.969	0.967
8	1.002	0.998	0.995	0.992	0.990	0.988	0.987	0.985	0.984	0.983
10	1.003	1.000	0.999	0.997	0.995	0.994	0.993	0.992	0.991	0.991
12	1.003	1.002	1.000	0.999	0.998	0.997	0.996	0.996	0.995	0.995
121975										
4	0.995	0.979	0.964	0.951	0.940	0.932	0.924	0.918	0.913	0.908
6	1.000	0.993	0.986	0.980	0.974	0.970	0.966	0.963	0.900	0.958
8	1.002	0.998	0.994	0.990	0.987	0.984	0.982	0.980	0.970	0.977
10	1.003	1.000	0.997	0.995	0.993	0.991	0.990	0.988	0.987	0.986
12	1.003	1.001	0.999	0.998	0.996	0.995	0.994	0.993	0.992	0.992

OPTIONAL EQUIPMENT

Motor Pre-Wire

TTXL Series Modular Cooling Towers(tm) are shipped with motors factory pre-wired to a central junction box (NEMA-4X). Motors can be factory pre-wired to individual "lock-out/tag-out" rotary disconnect switches. All motor wiring is Alpha brand shielded 12-4 AWG oil resistant, VFD compatible, liquid tight flexible cable (except 200/208/230V 7.5HP motors, which require 10-4 AWG).

Sub-Structure Kits

Each Modular Cooling Tower has a 1-foot high stub leg kit for mounting on customer furnished support structure. As an option, towers can be furnished with leg kits from 4 feet to 12 feet in height. The most common configuration uses 6-foot high legs to allow convenient access to the fan inlet of the tower for inspections and maintenance. Sub-structure kits include FRP legs with integrated footpads (Nylon), angle braces (FRP), and stainless steel assembly hardware; and are shipped loose for installation at the time of delivery and tower installation.

Control Panels

Panels are high quality, UL rated, NEMA 4 enclosures (epoxy painted steel) equipped for single-point wiring to a manual disconnect. Each control panel includes power distribution to individual motor starters with lockout disconnect, magnetic overload protection, and solid-state adjustable thermal overload protection. There is a door mounted H-O-A switch and RUN pilot light for each motor starter. Auxiliary motor starter contacts can be provided. A solid-state PLC is provided for supply water temperature control with a door-mounted operator interface display panel and an RTD temperature sensor for remote mounting in the customer's tower discharge piping.

Standard water temperature control is done with fan staging through the pre-programmed PLC.

Variable Frequency Drives

Optional water temperature control can be done with a remote mounted variable frequency drive (VFD) suitable for multiple motor operation. The VFD output is wired to the control panel disconnect switch. The output frequency of the VFD can be controlled through the pre-programmed PLC by means of a 4-20 ma or 0-24V analog output. If the VFD is bypassed for any reason, the PLC returns to fan staging control.

Operating Tower Tech cooling tower fans through a VFD provides the tightest temperature control possible at the very lowest energy consumption. When operated with variable water flow, the combination of the VFD and the variable flow Rotary Spray Nozzle™ provide energy saving opportunities that no other cooling tower can match. Call your Tower Tech sales representative for details.

Basin Heaters

Stainless steel electric immersion heaters are recommended when operating in low ambient temperature conditions in order to protect against basin freezing when the tower is shut down. A NEMA 4X control panel is provided to control up to 4 individual elements (6 kW each). A remote temperature sensor is provided for mounting in the tower basin and the controller is preset to 45 degrees F. All heating elements must be located within the same tower water basin as the sensing element. Threaded flanges are installed in the tower's cold water basin for mounting each heating element and the temperature sensor. The control panel must be field mounted and wired to each heating element and the temperature sensor. A power source separate from the cooling tower fans is recommended.

Level Control

When water level control is needed in the TTXL tower module, the standard level controller is a mechanical valve actuated through a float mounted on a short rod located in the external sump container which is attached to the terminal end of each tower module. To function correctly, the mechanical float valve requires inlet water pressure of 25 psi (or less) applied at the valve inlet. The use of a pressure reducing valve (PRV) is necessary when the inlet water supply exceeds 25 psi.

If a non-contact water level control is desired, a pre-engineered, self-contained ultrasonic liquid level control package is optionally available. The package consists of a continuous measuring ultrasonic device combined with a controlling relay, an LCD screen, and a stilling well mounting pipe. The stilling well pipe is mounted in the tower's equalization/overflow piping. The ultrasonic device operates on an analog 4-20ma circuit to the relay/LCD which sends command signals to the solenoid valve (solenoid valve not supplied). The LCD screen shows the water level and the indicator lights show whether the solenoid valve is commanded ON or OFF.

Seawater Applications

Tower Tech modules are the best solution available for cooling with seawater. All of the structural and internal components are inert in the presence of seawater. Even 304 stainless steel is aggressively attacked and corroded by the chlorides in seawater. Tower Tech offers a wide selection of fouling resistant fills and a 316 stainless steel hardware option to assure long life and low maintenance for your operations. There will be a 5% to15% thermal capacity (gpm) derate depending on the salinity content of the cooling water. See your Tower Tech representative for solutions to match your specific application.

Engineering Certifications

Certified calculations are available for all models with substructures up to 8 feet for seismic and wind loading in accordance with the International Building Code's most severe requirements. Sustained wind loading at 150 MPH (41 psf) for hurricane exposure and IBC seismic force factor Cs=0.4 x weight, category D (Ss=200, S1=150, soil class E).

Tower Tech has performed extensive acoustic testing in accordance with CTI Standard ATC-128 using licensed Acoustical Engineers. Sound data for all Tower Tech models is available. Computer simulated site specific 3D sound modeling is also available through your Tower Tech representative.

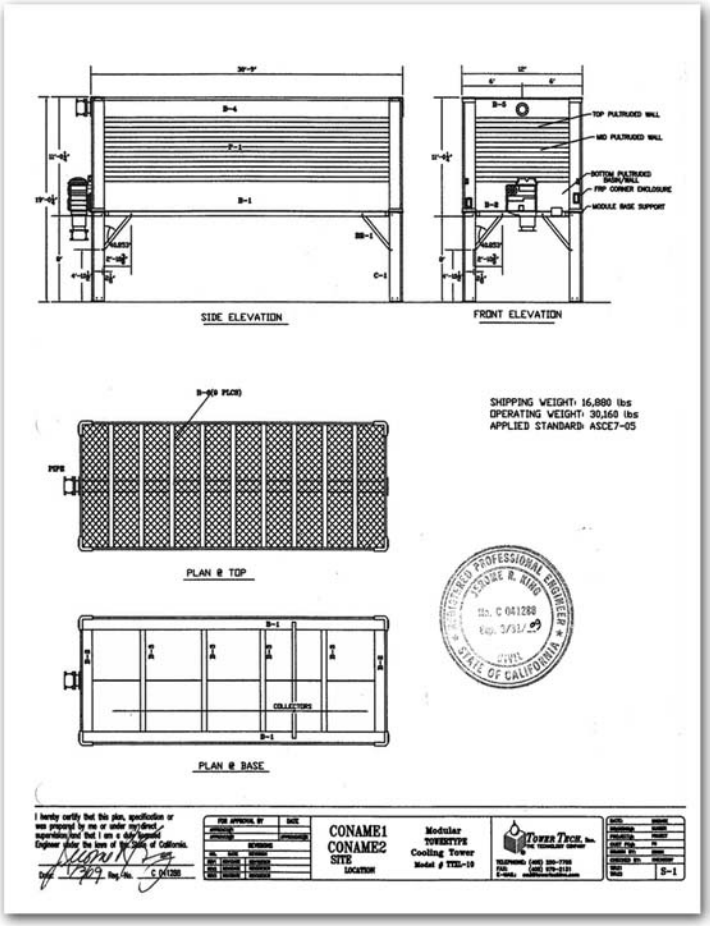

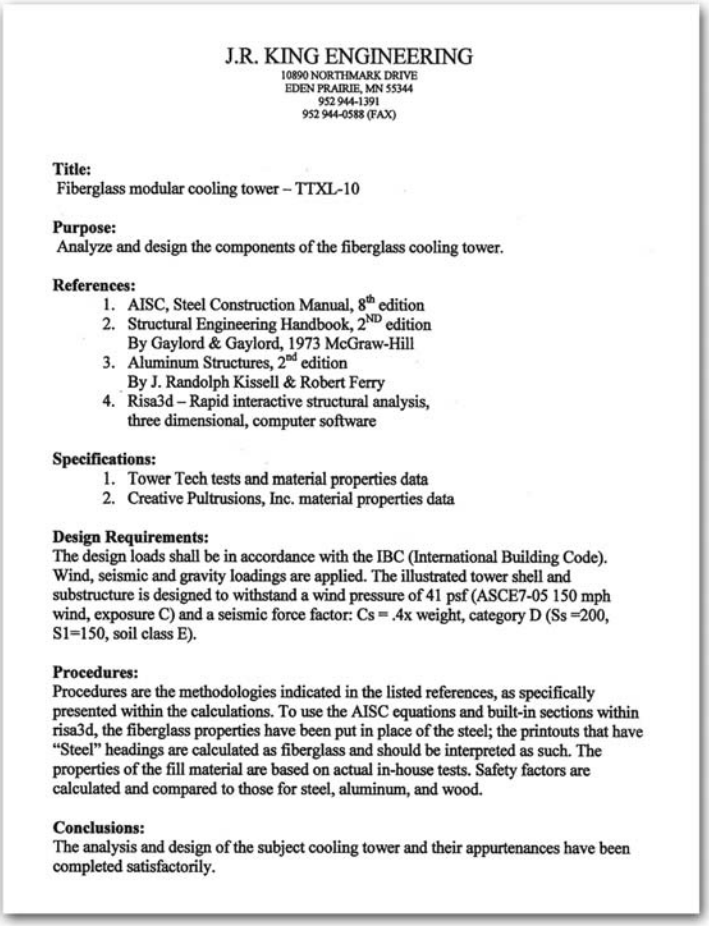

J.R. KING ENGINEERING
10890 NORTHMARK DRIVE
EDEN PRAIRIE, MN 55344
952 944-1391
952 944-0588 (FAX)

Title:
Fiberglass modular cooling tower – TTXL-10

Purpose:
Analyze and design the components of the fiberglass cooling tower.

References:
1. AISC, Steel Construction Manual, 8th edition
2. Structural Engineering Handbook, 2ND edition
   By Gaylord & Gaylord, 1973 McGraw-Hill
3. Aluminum Structures, 2nd edition
   By J. Randolph Kissell & Robert Ferry
4. Risa3d – Rapid interactive structural analysis, three dimensional, computer software

Specifications:
1. Tower Tech tests and material properties data
2. Creative Pultrusions, Inc. material properties data

Design Requirements:
The design loads shall be in accordance with the IBC (International Building Code). Wind, seismic and gravity loadings are applied. The illustrated tower shell and substructure is designed to withstand a wind pressure of 41 psf (ASCE7-05 150 mph wind, exposure C) and a seismic force factor: Cs = .4x weight, category D (Ss =200, S1=150, soil class E).

Procedures:
Procedures are the methodologies indicated in the listed references, as specifically presented within the calculations. To use the AISC equations and built-in sections within risa3d, the fiberglass properties have been put in place of the steel; the printouts that have "Steel" headings are calculated as fiberglass and should be interpreted as such. The properties of the fill material are based on actual in-house tests. Safety factors are calculated and compared to those for steel, aluminum, and wood.

Conclusions:
The analysis and design of the subject cooling tower and their appurtenances have been completed satisfactorily.

Variable Flow Offers Lowest $ kW/Ton

Conventional water distribution in cooling towers sacrifices valuable energy saving opportunities. This fact is even more pronounced in today's water filming style heat transfer medias.

The efficiency of evaporative heat transfer is affected by the air-to-water contact area and the mass flow liquid-to-gas ratio. In general, for a given heat load and water mass flow rate, the more surface area involved, the less required air velocity over the water surface, and consequently the less air-moving fan horsepower. If you want lower kW/ton, buy more air-to-water contact surface area.

Film media, such as the popular PVC cross-fluted corrugated film block, provides a breakthrough in cooling tower design. It greatly increases the contact surface area without increasing the size of the tower box. Adversely, it suffers quickly from scaling and biomass fouling in very compact air channels that negatively impact the flow of air.

Precise water treatment is required to prevent bio growth fouling and the fill must remain "wetted" to avoid evaporative scaling. Conventional water distribution uses fixed orifice spray nozzles that produce a round pattern above a rectangular fill pack. The nozzles are placed in a rectangular overlapping pattern to assure full wetting of the fill at the design water flow rate.

Water flow rates below the design point will not produce a full spray pattern and void areas will start to appear. Any fill's best efficiency is achieved when the liquid-to-gas ratio is evenly balanced throughout the fill media. Short patterns and overlapping patterns cannot accomplish it.

When a cooling tower system is faced with a variable water flow rate (i.e. multiple pump cycling or variable speed pumping) these pattern problems force the operator to isolate whole cooling tower cells to maintain proper water distribution under reduced load in the remaining on-line cells. If this is not done, the tower efficiency will suffer and the fill media will quickly foul. Isolating cells takes away air-to-water contact surface.

A water distribution system that can respond to variable flow rates and keep all of the fill media evenly wetted and in service is needed. This requires a nozzle that responds to flow changes to keep a constant pattern. A square pattern that avoids overlap would be best.

Putting this system on a three-cell tower with three matched pumps would yield the following opportunities. A typical tower would operate at 0.06 kW/ton for the tower alone at full load, 0.06 kW/ton at 2/3 load (two cells operating at 100%), and 0.06 kW/ton at 1/3 load (one cell operating at 100%). Under the same conditions, a constant pattern, variable spray system with variable speed drives on the fan motors would operate at 0.06 kW/ton at full load, 0.024 kW/ton at 2/3 load (all cells operating at 2/3 load), and 0.005 kW/ton at 1/3 load (all cells operating at 1/3 load).

These energy savings can only be achieved through use of a constant pattern, variable flow distribution system. This patented system is available for evaporative water-cooling towers at one place, only: Tower Tech. Come visit us at www.TowerTechInc.com to see our complete line of factory-assembled, modular fiberglass cooling towers for flow rates from 200 gpm to 200,000 gpm and more. Our towers are CTI Certified under STD-201 for your assurance of performance. We're worth a second look for a great many reasons. Check us out.

Our vision is to be the most customer-driven cooling tower company in the world -- the standard by which all other cooling tower companies are measured.

We are committed to preserving and protecting the environment by leading our industry in water and energy conservation and environmental responsibility.

5400 N.W. 5th St., Oklahoma City, OK 73127
TEL 405.290.7788 • FAX 405.979.2131
www.TowerTechInc.com

8 JUNE 2011 ©2011 Tower Tech, Inc., All Rights Reserved 2K